MINUTEMAN®
POWER TECHNOLOGIES
by Para Systems, Inc.

Enspire Series UPS
EN450G / EN600GU / EN750G

User's Manual

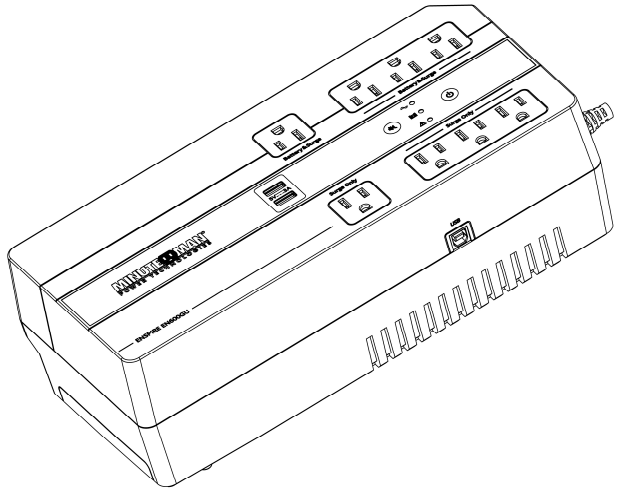

Para Systems, Inc.
1455 LeMay Dr.
Carrollton, TX 75007
Phone: 1-972-446-7363
Fax: 1-972-446-9011
Internet: minutemanups.com
UPS Sizing: sizemyups.com

PN: 34000552 R1

Table of Contents

1. Introduction 2

2. Controls and Indicators 8

3. Installation 10

4. Operation 14

5. Obtaining Service 18

6. Troubleshooting 19

7. Replacing the Battery 20

8. Specifications 30

9. Limited product Warranty 32

A1. Declaration of Conformity 33

Chapter 1: Introduction

Thank you for purchasing this power protection product. It has been designed and manufactured to provide many years of trouble-free service. Please read this manual before installing your Enspire Series UPS, models EN450G, EN600GU, EN750G as it provides important information that should be followed during the installation and the maintenance of the UPS system allowing you to correctly set up your system for the maximum safety and performance. Included is information on customer support and factory service if it is required. If you experience a problem with the UPS system, please refer to the Troubleshooting guide in this manual to correct the problem or collect enough information so that the Technical Support Department can assist you.

IMPORTANT SAFETY INSTRUCTIONS
SAVE THESE INSTRUCTIONS!
CONSIGNES DE SÉCURITÉ IMPORTANTES
SAUVEGARDEZ CES CONSIGNES!

Veuillez lire ce manuel avant l'installation de l'onduleur modèles EN450G, EN600GU, EN750G. Il contient de l'information importante qui doit être respectée au cours de l'installation et de l'entretien de l'onduleur et des batteries. Cette information vous permettra de correctement installer le système pour atteindre son rendement maximum en toute sécurité.

CAUTION! The maximum ambient operating temperature for this UPS series is 40°C (“0 ~ 40°C” for Ambient Operation).

ATTENTION! La température ambiante de fonctionnement maximale pour cette série d’onduleurs est de 40° C («0 ~ 40° C » pour une opération ambiante).

- The external vents and openings on the UPS are provided for ventilation. To ensure reliable operation of the UPS and to protect the UPS from over-heating, these vents and openings must not be blocked or covered. Do not insert any object into any of the vents or openings that may hinder the ventilation.
- Install the UPS system in a well-ventilated area, away from excess moisture, heat, dust, flammable gas, or explosives.
- Leave adequate space (at least 20cm) around all sides of the UPS system for proper ventilation.
- Before usage, you must allow the UPS system to adjust to room temperature (20°C~25°C or 68°F~77°F) for at least one hour to avoid moisture condensing inside the UPS.

- Les évents et ouvertures externes de l'onduleur sont prévus pour la ventilation. Il faut éviter de les bloquer ou de les couvrir afin de garantir un fonctionnement fiable de l'onduleur et de le protéger contre la surchauffe. N'introduisez aucun objet dans les évents ou les ouvertures qui pourrait gêner la ventilation.
- Installez l'onduleur dans un endroit bien ventilé, à l'abri de l'humidité, de la chaleur et de la poussière excessives, de gaz inflammables ou d'explosifs.
- Laissez suffisamment d'espace (au moins 20 cm) autour de l'onduleur pour assurer une bonne ventilation.
- Avant l'usage, laissez l'onduleur s'adapter à la température ambiante (20°C~25°C / 68°F~77°F) pendant au moins une heure afin d'éviter la condensation interne.

CAUTION! This UPS series is **ONLY** intended to be installed in an indoor temperature-controlled environment that is free of conductive contaminants. This UPS series is not intended for use in a computer room as defined in the Standard for the Protection of Electronic Computer/Data Processing Equipment ANSI/NFPA 75.

ATTENTION! Cette série d'onduleurs est **uniquement** destinée à être installée dans un environnement intérieur à température contrôlée, exempt de contaminants conducteurs. La série d'onduleurs ne convient pas pour une utilisation en salle d'ordinateur comme défini dans la norme pour la Protection des ordinateurs électroniques/équipements de traitement de données, ANSI/NFPA 75.

CAUTION! Connect the UPS to a two pole, three wire, grounded, utility power AC wall outlet. The utility powered AC wall outlet that supplies the UPS shall be installed near the UPS and shall be easily accessible. The receptacle must be connected to the appropriate branch protection (circuit breaker or fuse). Connection to any other type of receptacle may result in a shock hazard and violate local electrical codes. Do not use extension cords, adapter plugs, or surge strips.

M**ISE EN GARDE!** Branchez l’onduleur sur une prise murale CA de terre bipolaire à trois fils. La prise murale CA alimentant l'onduleur doit se trouver à proximité de l'onduleur et être facilement accessible. La prise de courant doit être connectée au dispositif de protection approprié (disjoncteur ou fusible). Une connexion à tout autre type de prise peut entraîner le risque d’électrocution et enfreindre les codes électriques locaux. N'utilisez jamais de rallonge, d'adaptateur ou de limiteur de surtension.

CAUTION! To reduce the risk of fire, connect only to a utility power circuit provided with 20 amperes maximum branch circuit over-current protection in accordance with the National Electric Code, ANSI/NFPA 70.

ATTENTION! Pour réduire les risques d'incendie, faites le raccordement uniquement sur un circuit d'alimentation électrique équipé d'un dispositif de protection de surintensité de circuit de dérivation de maximum 20 ampères, conformément au Code national de l'électricité, ANSI/NFPA 70.

CAUTION! To reduce the risk of electrical shock with the installation of this UPS system and the connected equipment, the user must ensure that the combined sum of the AC leakage current does not exceed 3.5mA.

ATTENTION! Pour réduire le risque de choc électrique pendant l'installation de cet onduleur et du matériel connecté, l'utilisateur doit s'assurer que la quantité de courant de fuite c.a. ne dépasse pas 3,5 mA.

CAUTION! To reduce the risk of electrical shock in conditions where the load equipment grounding cannot be verified, disconnect the UPS from the wall outlet before installing a computer interface cable. Reconnect the power cord only after all signaling connections are made.

ATTENTION! Pour réduire le risque de choc électrique dans une situation où il n'est pas possible de vérifier la mise à la terre du matériel de charge, il faut d'abord débrancher l'onduleur de la prise murale c.a. avant d'installer un câble d'interface ordinateur. Rebranchez le cordon d'alimentation uniquement après que toutes les connexions de signalisation aient été établies.

WARNING! This Uninterruptible Power Supply contains potentially hazardous voltages. Do not attempt to disassemble the UPS beyond the battery replacement procedure. This UPS contains no user serviceable parts. Repairs and battery replacement must be performed by or supervised by personnel knowledgeable about batteries and the required precautions.

AVERTISSEMENT! Cet onduleur contient des tensions potentiellement dangereuses. N'essayez pas de le démonter sauf pour remplacer la batterie. L'onduleur ne contient aucune pièce réparable par l'utilisateur. Il faut prendre les précautions requises; les réparations et le remplacement d'une batterie doivent être effectués ou supervisés par un personnel compétent en matière de batteries.

WARNING! Qualified Service Personnel ONLY must perform the Installation and Servicing of these UPS systems. MINUTEMAN accepts no liabilities and is not limited to injury to the Service Personnel, or damages to; the UPS, or the connected equipment caused by the incorrect installation or servicing of the UPS system.

AVERTISSEMENT! Seul un technicien qualifié peut installer et entretenir ces systèmes UPS. MINUTEMAN n'accepte aucune responsabilité pour, sans s'y limiter: les blessures souffertes par le personnel de service ou les dommages infligés à l'onduleur ou au matériel connecté, résultant d'une mauvaise installation ou d'un entretien incorrect de l'onduleur.

WARNING! Risk of Electrical Shock. Hazardous live parts inside these power supplies are energized from the battery even when the AC input is disconnected.

AVERTISSEMENT! Risque de choc électrique. Les parties actives dangereuses à l'intérieur de ces blocs d'alimentation sont sous tension à partir de la batterie, même lorsque l'alimentation c.a. est coupée.

CAUTION! To de-energize the outputs of the UPS:
1. If the UPS is on press and release the On/Off Button.
2. Disconnect the UPS from the wall outlet.
3. To completely de-energize the UPS, disconnect the battery.

ATTENTION! Pour mettre hors tension les sorties de l'onduleur:
1. Appuyez et relâchez le bouton On/Off (marche/arrêt) si l'onduleur est en marche.
2. Débranchez l'onduleur de la prise murale.
3. Déconnectez la batterie de l'onduleur pour le mettre complètement hors tension.

NOTICE: The output of this UPS system is not sinusoidal. It has a total harmonic distortion and maximum single harmonic distortion as below:

AVIS: La sortie de cet onduleur n'est pas sinusoïdale. Il a une distorsion harmonique totale et une distorsion harmonique simple maximale comme suit:

Model	EN450G	EN600GU	EN750G
Total Harmonic Harmonique totale	26.9%	26.7%	26.29%
Single Harmonic Harmonique simple	29.2%	27.8%	31.28%

ON / OFF BUTTON: To turn the UPS on: press and hold the On/Off button until the alarm sounds one beep and then release. Then in approximately twenty seconds the UPS will perform a five second self-test. Once the UPS has passed its self-test the UPS will be ready for normal operation.

To turn the UPS off: press and hold the On/Off button until the alarm sounds one beep and then release.

NOTICE: This equipment has been tested and found to comply with the limits for a Class B computing device in accordance with the specifications in Subpart J of Part 15 of FCC Rules and the Class B limits for radio noise emissions from digital apparatus set out in the Radio Interference of the Canadian Department of Communications. These limits are designed to provide reasonable protection against such interference in a residential installation. This equipment generates and uses radio frequency and if not installed and used properly, that is, in strict accordance with the manufacturer's instructions, this equipment may cause interference to radio and television reception. If this equipment does cause interference to radio or television reception, which can be determined by turning the equipment off and on, the user is encouraged to try to correct the interference by one or more of the following measures:

- Reorient the receiving antenna.
- Relocate the computer with respect to the receiver.
- Move the computer away from the receiver.
- Plug the computer into a different outlet so that the computer and receiver are on different branch circuits.
- Shielded communications interface cables must be used with this product.

AVIS: cet équipement a été testé et déclaré conforme aux limites d'un dispositif numérique de classe B conformément aux spécifications de la sous-section 15, section J, des normes de la FCC, et aux limites de classe B pour les émissions de bruits radioélectriques d'un appareil numérique énoncées dans le Règlement sur le brouillage radioélectrique du Ministère canadien des Communications. Ces limites sont conçues pour offrir une protection raisonnable contre les brouillages dans une installation résidentielle. Cet équipement génère et utilise des fréquences radio; s'il n'est pas installé et utilisé correctement, à savoir, en stricte conformité avec les instructions du fabricant, il peut brouiller la réception de la radio et de la télévision. Si cet équipement perturbe la réception de la radio ou de la télévision, ce qui peut être déterminé en éteignant et en allumant l'appareil, l'utilisateur est invité à essayer de corriger cette perturbation par l'une ou plusieurs des mesures suivantes:

- réorientez l'antenne de réception;
- déplacez l'ordinateur par rapport au récepteur;
- éloignez l'ordinateur du récepteur;
- branchez l'ordinateur sur une autre prise afin qu'il se trouve sur un circuit différent que le récepteur;
- utilisez des câbles d'interface de communication blindés avec ce produit.

WARNING! Changes or modifications to this unit not expressly approved by the party responsible for compliance could void the user's authority to operate the equipment.

AVERTISSEMENT! Tous changements ou modifications de cet appareil non expressément approuvés par la partie responsable de la conformité peuvent annuler le droit de l'utilisateur à utiliser l'équipement.

NOTE: These UPSs are shipped with the batteries disconnected. The batteries must be connected before putting these UPSs into service. Refer to Section 3 "Installation" for connecting the batteries.

REMARQUE: Les batteries de l'onduleur sont déconnectées pour l'expédition. Il faut les reconnecter avant de faire fonctionner l'onduleur. Voir le feuillet Installation rapide ou le mode d'emploi avant de connecter les batteries.

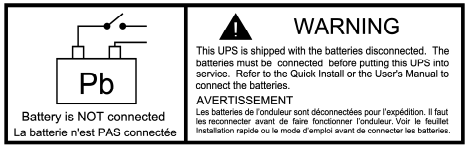

Receiving Inspection

After removing your UPS from its carton, it should be inspected for damage that may have occurred in shipping. Immediately notify the carrier and place of purchase if any damage is found. Warranty claims for damage caused by the carrier will not be honored. The packing materials that your UPS was shipped in are carefully designed to minimize any shipping damage. In the unlikely case that the UPS needs to be returned to the manufacturer, please use the original packing material. Since the manufacturer is not responsible for shipping damage incurred when the system is returned, the original packing material is inexpensive insurance. **PLEASE SAVE THE PACKING MATERIALS!**

Life Support Policy

As a general policy, we do not recommend the use of any of our products in life support applications where failure or malfunction of the product can be reasonably expected to cause failure of the life support device or to significantly affect its safety or effectiveness. We do not recommend the use of any of our products in direct patient care. We will not knowingly sell our products for use in such applications unless Para Systems receives, in writing, assurances satisfactory to us that (a) the risks of injury or damage have been minimized, (b) the customer assumes all such risks, and (c) our liability is adequately protected under the circumstances.

© COPYRIGHT 2021 BY PARA SYSTEMS, INC.

All Rights Reserved. All rights of this User Manual ("Manual"), including but not limited to the content, information, and figures are solely owned and reserved by Para Systems, Inc. ("Para Systems"). The Manual can only be applied to the operation or the use of this product. Any disposition, duplication, dissemination, reproduction, modification, translation, extraction, or usage of this Manual in whole or in part is prohibited without the prior written permission of Para Systems. Given that Para Systems will continuously improve and develop the product, changes may be made to the information in this Manual at any time without obligation to notify any person of such revision or changes. Para Systems will make all possible efforts to secure the accuracy and the integrity of this Manual. Para Systems disclaims any kinds or forms of warranty, guarantee, or undertaking, either expressly or implicitly, including but not limited to the completeness, faultlessness, accuracy, non-infringement, merchantability, or fitness for a particular purpose of the Manual.

Chapter 2: Controls and Indicators

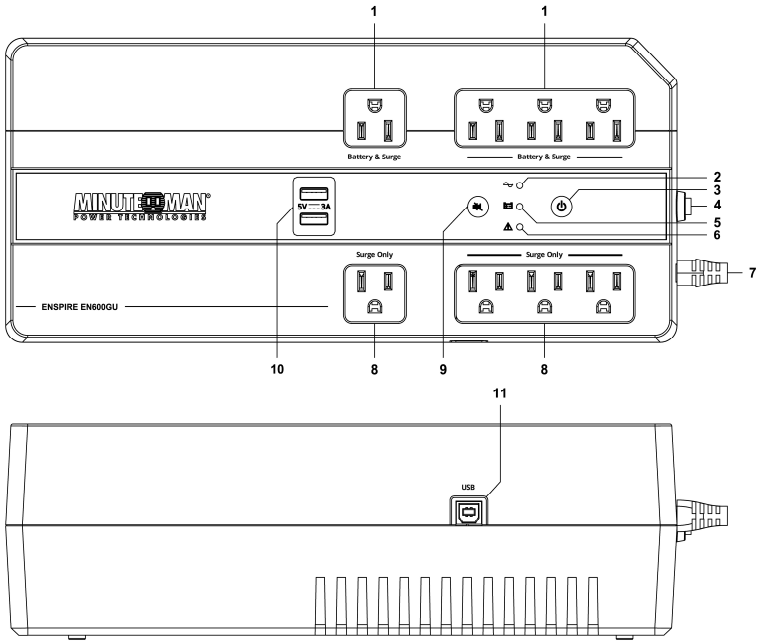

1. Battery Backup & Surge output receptacles: Mission critical equipment.
2. AC normal (Green) LED turns on during the AC normal mode and turns off during the battery mode.
3. On/Off Button: Turns the UPS On or Off.
4. Input circuit breaker: Protection against an excessive overload.
5. On-Battery (Yellow) LED turns on during the battery mode and turns off during the AC normal mode.
6. Warning / Fault (Red) LED turns is on when a Warning or Fault is detected and turns off during normal operation.
7. Input power cord: Connecting to Utility Power.
8. Surge-only output receptacles: Noncritical equipment.
9. Alarm Silencer Button: Silences the alarm during the Battery mode.
10. USB Charging Ports Type 'A' (EN600GU Only).
11. USB Communications Port (EN600GU & EN750G only): UPS monitoring and control.

Model	Input Power Cord	Output Power Receptacles
EN450G	NEMA 5-15P w/5 ft cord	4 - NEMA 5-15R Battery Backup & Surge 4 - NEMA 5-15R Surge Only
EN600GU		
EN750G		5 - NEMA 5-15R Battery Backup & Surge 5 - NEMA 5-15R Surge Only

The AC normal (Green) LED will be on when the UPS is operating in the normal AC mode and will turn off when the UPS is operating in the Battery mode.

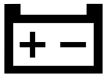

The On-Battery (Yellow) LED will turn on when the UPS is operating in the Battery mode and will turn off when the UPS is operating in the AC normal mode.

The Warning / Fault (Red) LED will turn on when the UPS detects an internal fault, an Overload, a Weak / Bad / Disconnected Battery, a Low Battery Warning, or a Site Wiring Fault. The LED will be off when the UPS is operating normally.

See the LED and Alarm functions table for more information.

The On/Off Button functions as follows:
When the UPS is in the Off position, press and hold the On/Off button until the alarm sounds one beep and then release to turn the UPS On.

When the UPS is in the On position, press and hold the On/Off button until the alarm sounds one beep and then release to turn the UPS Off.

When the unit is operating in Battery mode, pressing the Alarm Silencer Button will silence the audible alarm. Once the UPS reaches the LBW (Low Battery Warning) threshold the alarm will start beeping. The alarm cannot be silenced during the LBW alarm. Once the UPS transfers back to the AC normal mode the alarm will reset back to the default setting.

Except for the On-Battery alarm all the other Warning/Fault alarms cannot be silenced. Once the Warning/Fault condition has been corrected the alarm will reset to default.

Chapter 3: Installation

INSTALLATION PLACEMENT

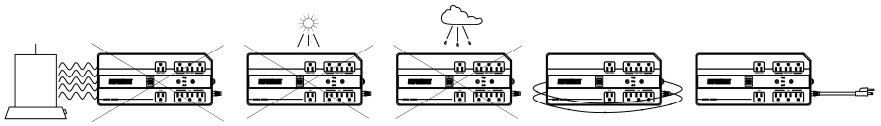

This UPS series is **ONLY** intended to be installed in an indoor temperature-controlled environment that is free of conductive contaminants. DO NOT operate the UPS in extremely dusty and/or unclean areas, locations near heating devices, water, or excessive humidity, or where the UPS is exposed to direct sunlight. Select a location, which will always provide good air circulation for the UPS. Route power cords so they cannot be walked on or damaged. Typical battery life is 3 to 5 years. Environmental factors do affect battery life. High temperatures, poor utility power, and frequent, short duration discharges have a negative impact on battery life. This UPS series is not intended for use in a computer room as defined in the Standard for the Protection of Electronic Computer/Data Processing Equipment ANSI/NFPA 75.

Cette série d'onduleurs est **UNIQUEMENT** destinée à être installée dans un environnement intérieure à température contrôlée, exempt de contaminants conducteurs. NE faites PAS fonctionner l'onduleur dans des endroits extrêmement poussiéreux ou sales, à proximité d'appareils de chauffage, d'eau ou dans un endroit extrêmement humide, ou lorsque l'onduleur est exposé à la lumière directe du soleil. Choisissez un emplacement toujours bien aéré pour l'installation. Acheminez les cordons électriques de manière à ce qu'on ne puisse pas les piétiner ou les endommager. La durée de vie normale de la batterie est de 3 à 5 ans et est affectée par des facteurs environnementaux. Des températures élevées, une mauvaise alimentation électrique et des décharges fréquentes et de courte durée ont un impact négatif sur la durée de vie de la batterie. Cette série d'onduleurs ne convient pas pour utilisation en salle d'ordinateur comme défini dans la norme pour la Protection des ordinateurs électroniques/équipements de traitement de données, ANSI/NFPA 75.

Operating Temperature (Maximum): 0 to 40°C (+32 to +104°F)
Operating Elevation: 0 to 3,000m (0 to +10,000 ft)
Operating and Storage Relative Humidity: 0 to 95%, non-condensing
Storage Temperature: -15 to +50°C (+5 to +122°F)
Storage Elevation: 0 to 15,000m (0 to +50,000 ft)

INSTALLATION

(QUALIFIED SERVICE PERSONNEL ONLY) (SEUL UN TECHNICIEN QUALIFIÉ)
Be sure to read the installation placement and all the cautions before installing the UPS. Place the UPS in the final desired location and complete the rest of the installation procedure. These UPSs are shipped with the internal batteries disconnected. The batteries must be connected before putting these UPSs into service. See Connecting the Battery. The primary installation is the Desktop / Office type. These UPSs can be wall mounted. The wallmount configuration allows the UPS to be mounted on the wall. There is a wallmount kit that comes with the UPS. The kit includes the wallmount template and two wallmount screws. See the Wallmount Template for the wallmount installation instructions.

CONNECTING THE BATTERY

(QUALIFIED SERVICE PERSONNEL ONLY) (SEUL UN TECHNICIEN QUALIFIÉ)
Please read all the **WARNINGS** and **CAUTIONS** before attempting to connect the battery.
Veuillez lire tous les **AVERTISSEMENTS** et **ATTENTIONS** avant d'essayer de connecter les piles.

1. Use **CAUTION!** the UPS is heavy. Remove the UPS from the shipping box and set upside down on a desk or a bench top.

NOTE: No tools are required for removing or installing the battery door.

2. Slide the battery door outward. (FIG. 1)
3. Lift the battery door upwards and then remove the battery by pulling the pull-tab. (FIG. 2)
4. Verify proper polarity. EN450G/EN600GU: Connect the battery positive (Red) wire to the battery positive (Red) terminal. EN750G: Connect the battery negative (Black) wire to the battery negative (Black) terminal. (FIG 3)
5. Reinstall the battery.
6. Reinstall the battery door onto the UPS and slide inward.
7. Continue with the rest of the Installation.

CONNEXION DE LA BATTERIE (EN450G/EN600GU/EN750G)

1. **MISE EN GARDE!** l'onduleur est lourd. Retirez l'onduleur de sa boîte d'expédition et posez-le à l'envers sur un bureau ou un banc.

REMARQUE: aucun outil n'est nécessaire pour retirer ou installer le couvercle de la batterie.

2. Faites glisser le couvercle de la batterie vers l'extérieur. (FIG. 1)
3. Soulevez le couvercle de la batterie, puis retirez la batterie en tirant sur la languette. (FIG. 2)
4. Vérifiez la polarité. EN450G EN600GU: Connectez le fil positif de la batterie (rouge) à la borne positive de la batterie (rouge). EN750G: connectez le fil négatif de la batterie (noir) à la borne négative de la batterie (noire). (FIG 3)
5. Réinstallez la batterie.
6. Remettez le couvercle de la batterie sur l'onduleur et glissez-le vers l'intérieur.
7. Continuez l'installation.

FIG. 1

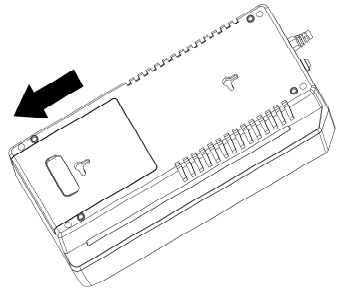

EN450G / EN600GU

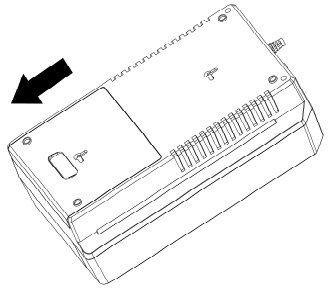

EN750G

FIG. 2

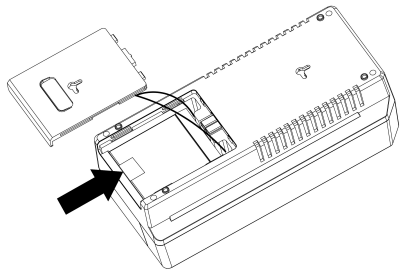

EN450G / EN600GU

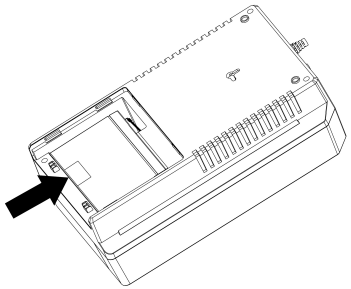

EN750G

FIG. 3

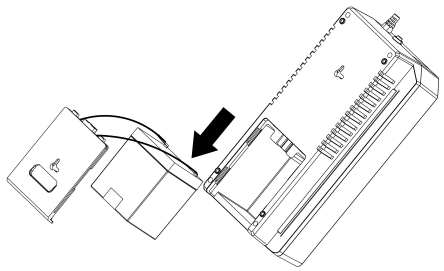

EN450G / EN600GU

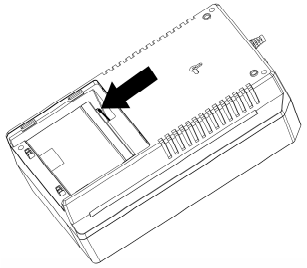

EN750G

CONNECTING YOUR EQUIPMENT

Plug the mission critical equipment into the Battery Backup & Surge output receptacles on the top panel of the UPS. Plug the noncritical equipment into the Surge Only output receptacles on the top panel of the UPS. Ensure that the connected equipment does not exceed the maximum output rating of the UPS (refer to the information label on the UPS or the electrical specifications in this manual). DO NOT PLUG EXTENSION CORDS, ADAPTER PLUGS, SURGE STRIPS OR POWER STRIPS INTO THE OUTPUT RECEPTACLES OF THE UPS, there is a risk of damaging the UPS and/or connected equipment. **CAUTION! DO NOT** connect a laser printer, copier, vacuum cleaner, or any other large electrical device into the output of the UPS.

CONNEXION DE L'ÉQUIPEMENT

Branchez l'équipement essentiel sur les prises de sortie Battery Backup & Surge (secours batterie et surtension) qui se trouvent au panneau supérieur de l'onduleur. Branchez l'équipement non essentiel sur les prises de sortie Surge Only (uniquement surtension) au panneau supérieur de l'onduleur. Vérifiez que l'équipement connecté ne dépasse pas la puissance de sortie maximale de l'onduleur (lisez l'étiquette d'information sur l'onduleur ou les spécifications électriques dans ce manuel). NE BRANCHEZ PAS DE CORDES D'EXTENSION, DE FICHES D'ADAPTATEUR, DE BANDES DE SURTENSION OU DE BARRES MULTIPRISES DANS LES PRISES DE SORTIE DE L'ONDULEUR,

au risque d'endommager l'onduleur ou l'équipement connecté. **MISE EN GARDE! ÉVITEZ** de connecter une imprimante laser, une photocopieuse, un aspirateur ou tout autre appareil électrique de grande taille à la prise de sortie de l'onduleur.

CONNECTING THE UPS TO AN AC SOURCE

CAUTION! To reduce the risk of fire, connect only to a utility powered circuit with 20 amperes maximum branch circuit over-current protection in accordance with the National Electric Code, ANSI/NFPA 70. Plug the UPS into a two pole, three wire, grounded receptacle only. The utility powered AC wall outlet that supplies the UPS shall be installed near the UPS and shall be easily accessible. DO NOT PLUG THE UPS INTO EXTENSION CORDS, ADAPTER PLUGS, SURGE STRIPS OR POWER STRIPS. DO NOT CUT THE INPUT PLUG OFF AND ATTEMPT TO HARDWIRE THIS UPS; DOING SO WILL VOID THE WARRANTY.

CONNEXION DE L'ONDULEUR À UNE SOURCE CA

MISE EN GARDE! Pour réduire les risques d'incendie, raccordez uniquement sur un circuit d'alimentation électrique alimenté par le service public et doté d'un dispositif de protection contre les surintensités du circuit de dérivation de 20 ampères maximum, conformément au Code national de l'électricité, ANSI/NFPA 70. Branchez l'onduleur uniquement sur une prise bipolaire à trois fils mise à la terre. La prise murale CA alimentant l'onduleur doit être installée à proximité de l'onduleur et être facilement accessible. NE BRANCHEZ PAS L'ONDULEUR SUR UNE RALLONGE, UN ADAPTATEUR, UN LIMITEUR DE SURTENSION OU UNE BARRE MULTIPRISES. NE COUPEZ JAMAIS LA FICHE D'ENTRÉE POUR TENTER DE CÂBLER CET ONDULEUR; CECI ANNULERA LA GARANTIE.

CHARGING THE BATTERY

The UPS will charge the internal batteries whenever the UPS is connected to an AC source and there is an acceptable AC voltage present (95 - 140VAC). It is recommended that the UPS's batteries be charged for a minimum of 4 hours before use. The UPS may be used immediately; however, the "On Battery" runtime may be less than normally expected. Typical battery life is 3 to 5 years. Environmental factors do affect battery life. High temperatures, poor utility power, and frequent, short duration discharges have a negative impact on battery life. If the UPS is going to be out of service or stored for a prolonged period, the batteries must be recharged for at least twenty-four hours every ninety days.

CHECKING THE SITE WIRING FAULT

After plugging the UPS into the AC wall outlet, check for the Site Wiring Fault. If the Warning / Fault (Red) LED is on and all the other LEDs are off, the UPS is plugged into an improperly wired AC wall outlet. Have a qualified Electrician correct the problem.

USB COMMUNICATIONS PORT CONNECTION (OPTIONAL)
The EN600GU and EN750G supports USB communications. The power monitoring software and interface cable can be used with the UPS. Use only the interface cable that come with these UPSs. The USB communications protocol is HID. The HID USB driver comes standard in the Windows OS. Simply connect the USB cable to the USB communications port on the side panel of the UPS. Connect the other end of the USB cable to the device that will be monitoring/controlling the UPS and then follow the prompts on the screen. When using the UPS's USB port with Windows 8 or 10 the Power Options in the Control Panel may need to be configured. Connecting to the Communications Port is optional. The UPS works properly without this connection.

POWER MONITORING SOFTWARE
The EN600GU and EN750G supports Minuteman's SentryHD power monitoring software. Please go to our web site at www.minutemanups.com/support, and then look under Minuteman Software Download Center. Please download (Free of Charge) the latest version of the Minuteman SentryHD software.

USB CHARGING PORTS (OPTIONAL)
There are two (2) Type 'A' USB charging ports on the EN600GU. These USB charging ports are 5Volt 3Amp max total. Connecting to the USB Charging Port is optional. The UPS works properly without this connection.

Chapter 4: Operation

SYSTEM OVERVIEW
This Standby UPS protects computers, servers, telecom systems, VoIP systems, security systems, and a variety of electronic equipment from blackouts, brownouts, over-voltages, and surges. During normal AC operation, the UPS will quietly and confidently protect your system from power anomalies.

The UPS will charge the batteries with the UPS in the on or off position if the UPS is plugged into the wall outlet and there is an acceptable AC voltage present (95 - 140VAC). When a blackout, brownout, or an overvoltage condition occurs; the UPS will transfer to the battery mode, the On-Battery indicator will illuminate, and the audible alarm will sound once every five seconds indicating that the commercial power is lost or unacceptable. When the commercial power returns or is at an acceptable level, the UPS will automatically transfer back to the AC normal mode and start recharging the batteries. During an extended outage when there is approximately two minutes of backup time remaining the audible alarm will sound twice every five seconds. This Low Battery Warning is informing the user that they should save all open files. When the batteries reach the predetermined level, the UPS will automatically shutdown protecting the batteries from over discharging. Once the commercial power returns the UPS will automatically restart, providing safe usable power to the connected equipment and start recharging the batteries.

EN450G Block Diagram of the Basic Wiring and Internal Circuit Configuration

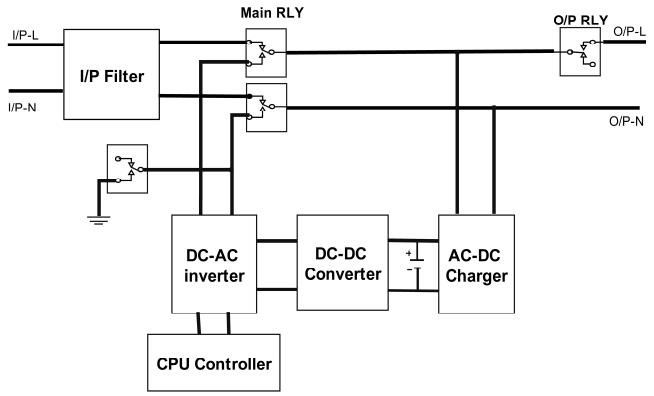

EN600GU Block Diagram of the Basic Wiring and Internal Circuit Configuration

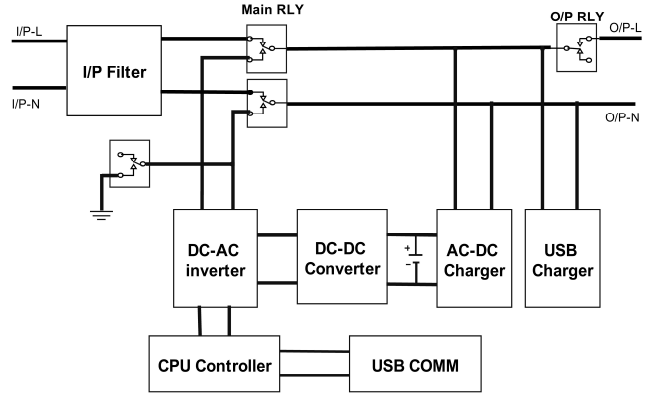

EN750G Block Diagram of the Basic Wiring and Internal Circuit Configuration

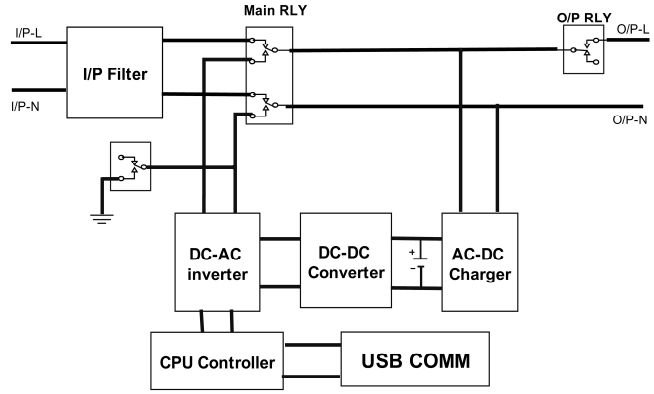

TURNING THE UPS ON / OFF

To turn the UPS on: press and hold the On/Off button until the alarm sounds one beep and then release. Then in approximately twenty seconds the UPS will perform a five second self-test. Once the UPS has passed its self-test the UPS will be ready for normal operation.

To turn the UPS off: press and hold the On/Off button until the alarm sounds one beep and then release. The UPS will continue to charge the batteries whenever it is plugged into a wall outlet and there is an acceptable AC voltage present (95 - 140VAC).

ALARM SILENCER BUTTON

When the unit is operating in Battery mode, pressing the Alarm Silencer Button will silence the audible alarm. Once the UPS reaches the LBW (Low Battery Warning) threshold the alarm will start beeping. The alarm cannot be silenced during the LBW alarm or any fault condition. Once the UPS transfers to the AC mode the alarm will be reset to default.

LED and ALARM FUNCTIONS

Description	AC Normal (Green) LED	On-Battery (Yellow) LED	Warning / Fault (Red) LED	Audible Alarm
AC Mode	ON	OFF	OFF	OFF
Battery Mode	OFF	ON	OFF	1-Beep every 5-seconds
Low Battery Warning	OFF	ON	ON	2-Beeps every 5-seconds
Overload AC Mode	ON	OFF	ON	1-Beep every 0.5-seconds
Overload Battery Mode	OFF	ON	ON	1-Beep every 0.5-seconds
Weak / Bad / Disconnected Battery	ON (AC Mode)	OFF (AC Mode)	ON (AC Mode)	3-Beeps every 5-minutes
	OFF (Unit off, but plugged in)	OFF (Unit off, but plugged in)	ON (Unit off, but plugged in)	
Internal Fault	OFF	OFF	ON	Constant Beeping
Site Wiring Fault	OFF	OFF	ON	OFF
The unit is off, plugged into the wall outlet and charging the battery	OFF	OFF	OFF	OFF

ALARMS

BATTERY MODE

When the UPS is operating in the Battery mode, the AC normal LED will turn off, the On-Battery LED will turn on and the alarm will sound one beep every five seconds. Once the UPS returns to the normal AC mode, the alarm will stop, the On-Battery LED will turn off and the AC normal LED will turn on.

LOW BATTERY WARNING

When the batteries reach the predetermined level, the Warning/Fault LED will turn on and the alarm will sound two beeps every five seconds. The audible alarm cannot be silenced during the LBW alarm. This information is to inform the user that there is approximately two minutes of runtime remaining before the UPS shuts down. This condition will continue until either AC returns or the UPS's self-protection circuit shuts the UPS down to protect the battery from over discharging.

WEAK / BAD / DISCONNECTED BATTERY

The UPS automatically tests the battery's condition. If the battery is weak, bad, or disconnected, the Warning/Fault LED will turn on and the alarm will sound three beeps every five minutes until the battery is either reconnected, replaced or passes a self-test. The audible alarm cannot be silenced during the Weak/Bad/Disconnected Battery alarm. It is recommended that the UPS be allowed to charge overnight before performing a battery test to confirm a Weak/Bad Battery condition.

OVERLOAD

When the amount of load attached to the UPS exceeds its power rating, the Warning/Fault LED will turn on and the alarm will sound one beep every half a second (AC and Battery modes). This alarm will remain on until the excess load is removed, or the UPS's self-protection circuit shuts the UPS down. If the UPS has shutdown, remove part of the load and then press the On/Off button to turn the UPS on. The audible alarm cannot be silenced during the Overload alarm.

UPS FAULT

When the UPS detects an internal fault, the Warning/Fault LED will turn on and the alarm will sound continuously, and the output will be turned off. The audible alarm cannot be silenced during the Fault alarm. The fault condition, in some instances, may be cleared by turning the UPS off and then back on again. If the fault condition does not clear the UPS must be sent in for service. See the Troubleshooting section.

Chapter 5: Obtaining Service

IF THE UPS REQUIRES SERVICE

1. Use the Troubleshooting section to eliminate obvious causes.
2. Verify there are no tripped circuit breakers and that the batteries are good. A tripped circuit breaker and defective batteries are the most common issues.
3. Call your dealer for assistance. If you cannot reach your dealer or if they cannot resolve the issue, call our Technical Support department at: (972) 446-7363 or send an email to support@minutemanups.com or visit our website minutemanups.com and look under the Support tab. Before calling the Technical Support, Department have the following information available:
   a) Contact name and address.
   b) Where and when the unit was purchased.
   c) All of the model information about your unit.
   d) The serial number of your unit.
   e) Any information on the failure, including LEDs that may be illuminated or error messages displayed.
   f) A description of the protected equipment including model numbers, if possible.
   g) A technician will ask you for the above information and if possible, help solve the issue over the phone. If the unit requires factory service, the Technical Support Representative will issue you a Return Material Authorization Number (RMA #). **We must have the model number and the serial number of the product to issue an RMA #.**
   h) If the unit is under warranty, the repairs will be done at no charge. If the unit is not under warranty, there will be a charge for the repair.
4. Pack the unit in its original packaging. If the original packaging is no longer available, ask the Technical Support Representative about obtaining a new set. It is important to pack the unit properly to avoid damage in transit. Never use Styrofoam beads for a packing material.
   a) Include a letter with your name, address, daytime phone number, RMA number, a copy of your original sales receipt, and a brief description of the problem.
5. Mark the RMA # on the outside of all packages. The factory cannot accept any package without the RMA # marked on the outside of the package.
6. Return the unit by insured prepaid carrier to:

Para Systems Inc.
MINUTEMAN UPS
1809 W. Frankford Road, Suite 150
Carrollton, TX 75007
ATTN: RMA # _____

Chapter 6: Troubleshooting

Symptom / Error Code	Cause / What to Do
UPS will not turn on.	Press the On/Off button and release after one beep.
UPS operates in battery mode only, even though there is AC present.	Turn the UPS off and disconnect the power cord from the wall outlet. Reset the input circuit breaker by pressing the plunger back in. If the input circuit breaker trips after the UPS restarts, reduce the load on the UPS.
Low Battery Warning.	The UPS's battery reserve is low. This condition will continue until AC returns or the UPS shuts down from battery exhaustion.
UPS does not provide expected runtime.	Charge the batteries for 8-hours and retest. If the runtime is still less than expected, the batteries may need to be replaced.
The AC normal LED is illuminated, but there is no output.	Disconnect the computer cable from the UPS, and then press the On/Off button. If UPS works normally, the software had control of the UPS.
The Warning / Fault LED is illuminated, and the alarm is sounding continuously.	The UPS has an internal problem. Call for service.
The Warning / Fault LED is illuminated, and the alarm is sounding 1-beep every 0.5 seconds.	Check the specifications and remove part of the load. If the UPS shuts down because of an Overload, remove part of the load and then press the On/Off button to turn the UPS on.
The Warning / Fault LED is illuminated, and the alarm is sounding 3-beeps every 5 minutes.	Check the battery connections, charge the batteries for 8-hours and retest, or replace the batteries.
The Warning / Fault LED is illuminated, all the other LEDs are off, and the alarm is not sounding.	Have a qualified electrician correct the service wiring.

Chapter 7: Replacing the Battery

QUALIFIED SERVICE PERSONNEL ONLY (SEUL UN TECHNICIEN QUALIFIÉ)

Please read all the **WARNINGS** and **CAUTIONS** before attempting to service the batteries. Typical battery life is 3 to 5 years. Environmental factors do affect battery life. High temperatures, poor utility power, and frequent, short duration discharges have a negative impact on battery life.

Veuillez lire tous les **AVERTISSEMENTS** et **MISES EN GARDE** avant de tenter d'entretenir la batterie. La durée de vie normale de la batterie est de 3 à 5 ans et est affectée par des facteurs environnementaux. Des températures élevées, une mauvaise alimentation électrique et des décharges fréquentes et de courte durée ont un impact négatif sur la durée de vie d'une batterie.

WARNING! This UPS contains potentially hazardous voltages. Do not attempt to disassemble the UPS beyond the battery replacement procedure. This UPS contains no user serviceable parts. Repairs and battery replacement must be performed by **QUALIFIED SERVICE PERSONNEL ONLY.**

AVERTISSEMENT! Cet onduleur contient des tensions potentiellement dangereuses. N'essayez pas de le démonter au-delà de la procédure de remplacement d'une batterie. L'onduleur ne contient aucune pièce réparable par l'utilisateur. **SEUL UN TECHNICIEN QUALIFIÉ** est autorisé à effectuer les réparations et le remplacement d'une batterie.

CAUTION! Do not open or mutilate batteries. Released electrolyte is harmful to the skin and eyes and may be toxic.

ATTENTION! Évitez d'ouvrir ou d'abîmer les batteries. L'électrolyte qu'elles contiennent nuit à la peau et aux yeux et peut être toxique.

CAUTION! Do not dispose of batteries in a fire. The batteries may explode. The batteries in this UPS are recyclable. Dispose of the batteries properly. The batteries contain lead and pose a hazard to the environment and human health if not disposed of properly. Refer to local codes for proper disposal requirements or return the battery to the supplier.

ATTENTION! N'essayez jamais de vous débarrasser d'une batterie en la brûlant. Elle risque d'exploser. Les batteries de cet onduleur sont recyclables. Éliminez-les de manière appropriée. Les batteries contiennent du plomb et posent un danger pour l'environnement et la santé si elles ne sont pas éliminées de façon appropriée. Consultez les codes locaux pour savoir comment correctement éliminer une batterie ou renvoyez-la au fournisseur.

CAUTION! The battery system can present a risk of electrical shock. These batteries produce enough current to burn wire or tools very rapidly, producing molten metal. Observe these precautions when replacing the batteries:

1. Remove watches, rings, or other metal objects.
2. Use hand tools with insulated handles.
3. Wear protective eye gear (goggles), rubber gloves and boots.
4. Do not lay tools or other metal parts on top of batteries.
5. Disconnect the charging source prior to connecting or disconnecting the battery terminals.
6. Determine if the battery is inadvertently grounded. If the battery is, remove the source of the grounding. Contact with any part of a grounded battery can result in an electrical shock. The likelihood of such shock will be reduced if such grounds are removed during installation and maintenance.

ATTENTION! Les batteries peuvent entraîner le risque de choc électrique. Elles produisent suffisamment de courant pour brûler très rapidement des fils ou outils, les causant à fondre. Prenez les précautions suivantes lors du remplacement d'une batterie.

1. Retirez votre montre, bagues ou autres objets métalliques.
2. Utilisez des outils à main à poignées isolantes.
4. Portez des lunettes de protection, des gants en caoutchouc et des bottes.
5. Ne placez jamais des outils ou autres objets en métal sur le dessus d'une batterie.
6. Déconnectez la source d'alimentation avant de brancher ou de débrancher les bornes d'une batterie.
7. Vérifiez si, par inadvertance, la batterie est toujours mise à la terre. Si c'est le cas, supprimez la source de mise à terre. Le contact avec n'importe quelle partie d'une batterie mise à la terre peut causer un choc électrique. La suppression de dispositifs de mise à terre pendant l'installation et l'entretien réduit le risque de chocs électriques.

CAUTION! Replace the batteries with the same number and type as originally installed in the UPS. These batteries have pressure operated vents. These UPSs contain sealed non-spillable maintenance-free lead acid batteries.

ATTENTION! Remplacez les batteries par des batteries du même numéro et type que celles d'origine. Une batterie de numéro et type différents peut causer une explosion. Les batteries sont équipées de purgeurs actionnés par pression. Les onduleurs contiennent des batteries au plomb étanches et inversables qui ne requièrent aucun entretien.

Model #	EN450GU EN600GU	EN750G
Battery Module Part #	BM0094	BM0095

BATTERY REPLACEMENT PROCEDURE (EN450G / EN600GU)

(QUALIFIED SERVICE PERSONNEL ONLY) (SEUL UN TECHNICIEN QUALIFIÉ)

PLEASE READ THE CAUTIONS AND WARNINGS BEFORE ATTEMPTING TO REPLACE THE BATTERY MODULE.

Hot-swappable batteries mean that the battery module can be replaced without powering down the whole UPS system.

NOTE: If there is a power interruption while replacing the hot-swappable battery module, with the UPS on, the load will not be backed up. To hot swap the battery module, start with step number 6.

1. Turn off the equipment that is plugged into the output of the UPS.
2. Turn off the UPS.
3. Unplug the UPS's power cord from the wall outlet.
4. Unplug the equipment from the output receptacles of the UPS.
5. Unplug the computer interface cable from the side panel of the UPS.

NOTE: No tools are required for removing or installing the battery door.

6. Grasp the battery door handle and slide the battery door outward. (FIG. 1)

FIG. 1

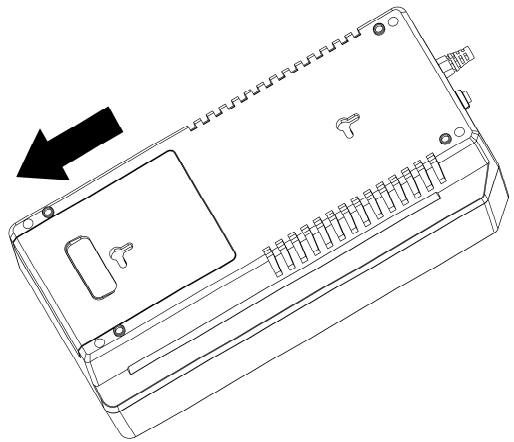

7. Lift the battery door upwards, remove the battery module by pulling the pull-tab, and then set aside. (FIG. 2)

CAUTION! DO NOT pull the battery module out by pulling on the battery wires.

8. Disconnect the battery positive (Red) wire. (FIG. 3)
9. Disconnect the battery negative (Black) wire and set the old battery module aside. (FIG. 3)

CAUTION! Do not short the battery positive wire to the battery negative wire.

10. Verify proper polarity. Connect the battery negative (Black) wire to the battery negative (Black) terminal on the new battery module.

FIG. 2

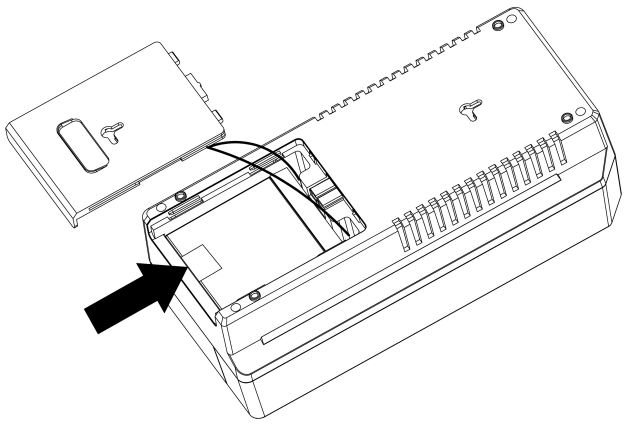

FIG. 3

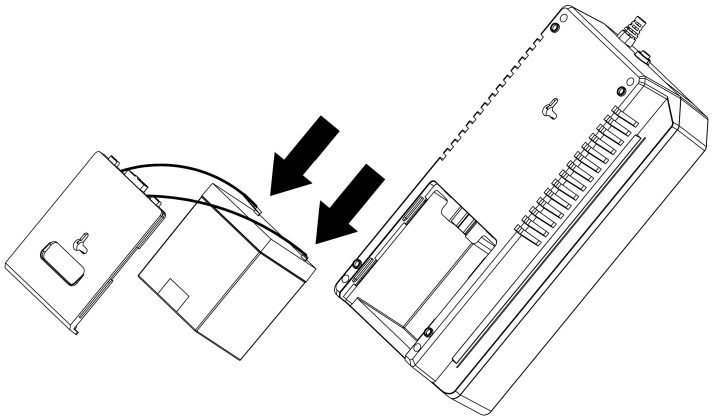

11. Verify proper polarity. Connect the battery positive (Red) wire to the battery positive (Red) terminal on the new battery module.
12. Slide the new battery module into the UPS.
13. Reinstall the battery door on the UPS.

NOTE: Some sparking might occur this is normal.

14. Properly dispose of the old battery module at an appropriate recycling facility or return them to the supplier in the packing material for the new battery module.
15. The UPS is now ready for normal operation.

NOTE: If the UPS has a Weak/Bad Battery Alarm after replacing the battery module, a battery test must be performed to clear the Weak/Bad Battery Alarm. A battery test can be performed by using the software or by disconnecting the power cord from the wall outlet for 10-seconds and then reconnecting the power cord back to the wall outlet.

REMPLACEMENT DE LA BATTERIE (EN450G / EN600GU)
(SEUL UN TECHNICIEN QUALIFIÉ)

VEUILLEZ LIRE LES AVERTISSEMENTS ET MISES EN GARDE AVANT DE TENTER DE REMPLACER LA BATTERIE.
Une batterie remplaçable à chaud peut être remplacée sans mettre hors tension l'ensemble de l'onduleur.
REMARQUE: s'il y a une coupure de courant pendant le remplacement de la batterie remplaçable à chaud avec l'onduleur en marche, la charge ne sera pas sauvegardée. Pour remplacer la batterie à chaud, commencez par l'étape 6.

1. Éteignez l'équipement qui est branché sur la sortie de l'onduleur.
2. Éteignez l'onduleur.
3. Débranchez le cordon d'alimentation de l'onduleur de la prise murale.
4. Débranchez l'équipement des prises de sortie de l'onduleur.
5. Débranchez le câble d'interface de l'ordinateur du panneau latéral de l'onduleur.

REMARQUE: aucun outil n'est nécessaire pour retirer ou installer le couvercle de la batterie.

6. Saisissez la poignée du couvercle de la batterie et faites glisser le couvercle vers l'extérieur. (FIG. 1)

FIG. 1

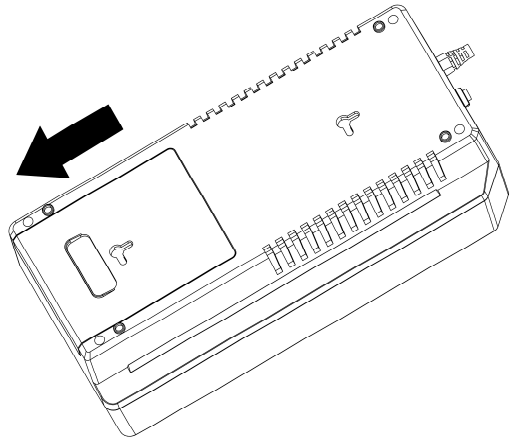

7. Soulevez le couvercle de la batterie, retirez la batterie en tirant sur la languette, puis mettez-la de côté. (FIG. 2)

ATTENTION! NE retirez PAS la batterie en tirant sur les fils de la batterie.

8. Débranchez le fil positif de la batterie (rouge). (FIG. 3)
9. Débranchez le fil négatif de la batterie (noir) et mettez de côté la batterie usagée. (FIG. 3)

MISE EN GARDE! NE court-circuitez pas le fil positif de la batterie avec le fil négatif de la batterie.

10. Vérifiez la polarité. Connectez le fil négatif de la batterie (noir) à la borne négative de la nouvelle batterie (noire).

FIG. 2

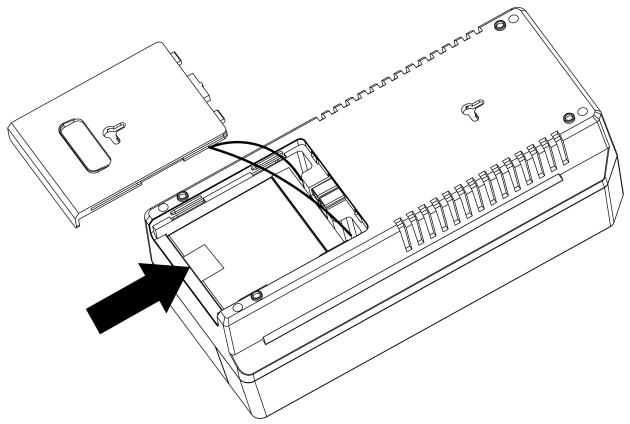

FIG. 3

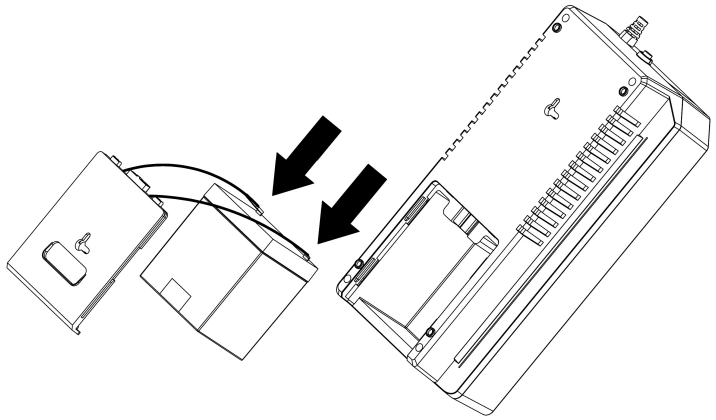

11. Vérifiez la polarité. Connectez le fil positif de la batterie (rouge) à la borne positive de la nouvelle batterie (rouge).
12. Insérez la nouvelle batterie dans l'onduleur.
13. Remettez le couvercle de la batterie sur l'onduleur.

REMARQUE: il peut y avoir quelques étincelles, mais ceci est normal.

14. Débarrassez-vous de la batterie usagée dans un centre de recyclage approprié ou renvoyez-la au fournisseur dans l'emballage de la nouvelle batterie.
15. L'onduleur est maintenant prêt à fonctionner normalement.

REMARQUE: il faut effectuer un test de batterie en cas d'alarme Batterie faible/défectueuse après le remplacement de la batterie, afin de supprimer l'alarme. Un test de batterie peut être effectué à l'aide du logiciel ou en débranchant le cordon d'alimentation de la prise murale pendant 10 secondes, puis en le rebranchant.

BATTERY REPLACEMENT PROCEDURE (EN750G)

(QUALIFIED SERVICE PERSONNEL ONLY) (SEUL UN TECHNICIEN QUALIFIÉ)

PLEASE READ THE CAUTIONS AND WARNINGS BEFORE ATTEMPTING TO REPLACE THE BATTERY MODULE.

Hot-swappable batteries mean that the battery module can be replaced without powering down the whole UPS system.

NOTE: If there is a power interruption while replacing the hot-swappable battery module, with the UPS on, the load will not be backed up. To hot swap the battery module, start with step number 6.

1. Turn off the equipment that is plugged into the output of the UPS.
2. Turn off the UPS.
3. Unplug the UPS's power cord from the wall outlet.
4. Unplug the equipment from the output receptacles of the UPS.
5. Unplug all the cables from the side panel of the UPS.

NOTE: No tools are required for removing or installing the battery door.

6. Grasp the battery door handle, slide the battery door outward, and then lift upwards and set aside. (FIG. 1)

FIG. 1

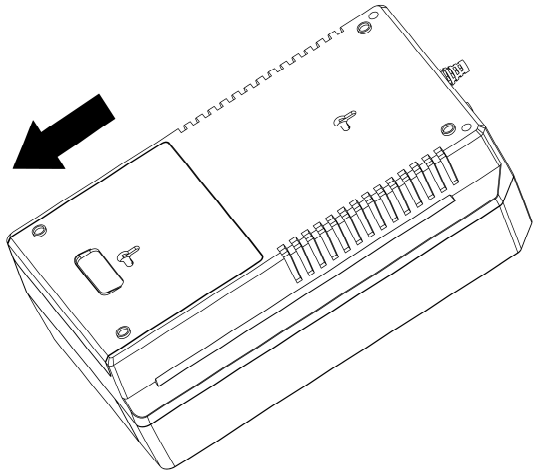

7. Grasp the pull-tab and pull the battery module upwards. (FIG. 2) Do not pull the battery module out by pulling on the battery wires.
8. Disconnect the battery negative (Black) wire. (FIG. 3)
9. Disconnect the battery positive (Red) wire and set the old battery module aside. Do not short the battery positive wire to the battery negative wire.
10. Verify proper polarity. Connect the battery positive (Red) wire to the battery positive (Red) terminal on the new battery module.

FIG. 2

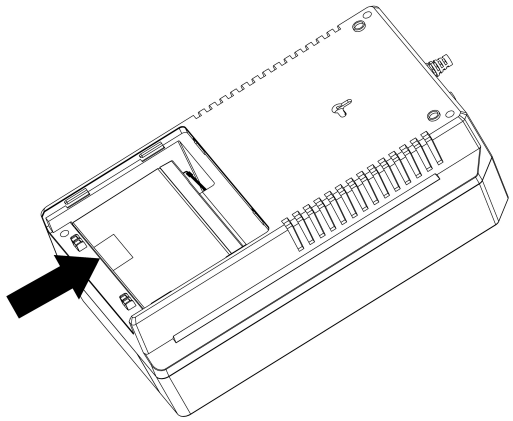

FIG. 3

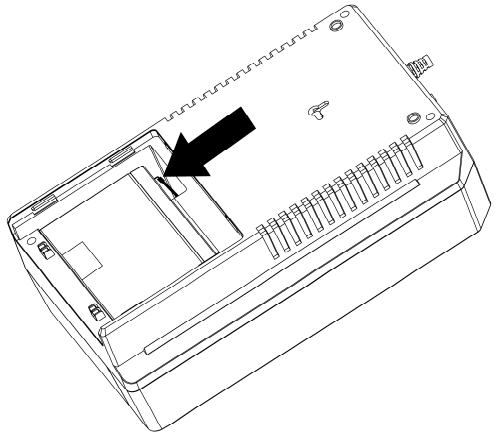

11. Verify proper polarity. Connect the battery negative (Black) wire to the battery negative (Black) terminal on the new battery module.

NOTE: Some sparking might occur this is normal.

12. Slide the new battery module into the UPS.
13. Reinstall the battery door on the UPS.
14. Properly dispose of the old battery module at an appropriate recycling facility or return them to the supplier in the packing material for the new battery module.
15. The UPS is now ready for normal operation.

NOTE: If the UPS has a Weak/Bad Battery Alarm after replacing the battery module, a battery test must be performed to clear the Weak/Bad Battery Alarm. A battery test can be performed by using the software or by disconnecting the power cord from the wall outlet for 10-seconds and then reconnecting the power cord back to the wall outlet.

REMPLACEMENT DE LA BATTERIE (EN750G)
(SEUL UN TECHNICIEN QUALIFIÉ)

VEUILLEZ LIRE LES AVERTISSEMENTS ET MISES EN GARDE AVANT DE TENTER DE REMPLACER LA BATTERIE.
Une batterie remplaçable à chaud peut être remplacée sans mettre hors tension l'ensemble de l'onduleur.
REMARQUE: s'il y a une coupure de courant pendant le remplacement de la batterie remplaçable à chaud avec l'onduleur en marche, la charge ne sera pas sauvegardée. Pour remplacer la batterie à chaud, commencez par l'étape 6.

1. Éteignez l'équipement qui est branché sur la sortie de l'onduleur.
2. Éteignez l'onduleur.
3. Débranchez le cordon d'alimentation de l'onduleur de la prise murale.
4. Débranchez l'équipement des prises de sortie de l'onduleur.
5. Débranchez le câble d'interface de l'ordinateur du panneau latéral de l'onduleur.

REMARQUE: aucun outil n'est nécessaire pour retirer ou installer le couvercle de la batterie.

6. Saisissez la poignée du couvercle de la batterie, faites glisser le couvercle vers l'extérieur, puis soulevez-le et mettez-le de côté. (FIG. 1)

FIG. 1

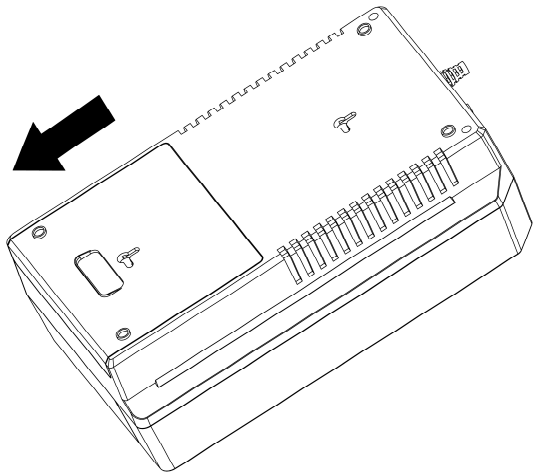

7. Saisissez la languette et tirez la batterie vers le haut. (FIG. 2) NE retirez PAS la batterie en tirant sur les fils de la batterie.
8. Débranchez le fil négatif de la batterie (noir). (FIG. 3)
9. Débranchez le fil positif de la batterie (rouge) et mettez de côté la batterie usagée. Ne court-circuitez pas le fil positif de la batterie avec le fil négatif de la batterie.
10. Vérifiez la polarité. Connectez le fil positif de la batterie (rouge) à la borne positive de la nouvelle batterie (rouge).

FIG. 2

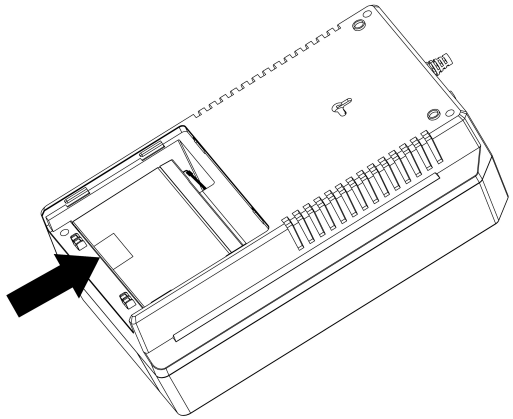

FIG. 3

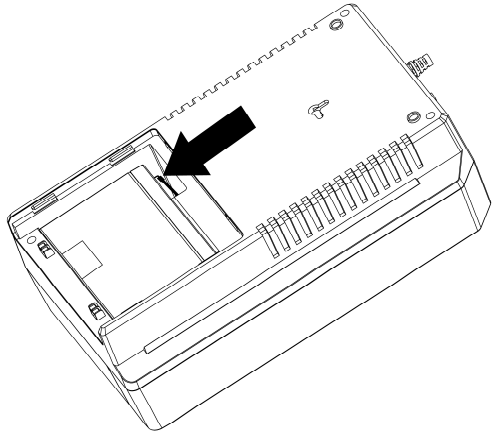

11. Vérifiez la polarité. Connectez le fil négatif de la batterie (noir) à la borne négative de la nouvelle batterie (noire).

REMARQUE: il peut y avoir quelques étincelles, mais ceci est normal.

12. Insérez la nouvelle batterie dans l'onduleur.
13. Remettez le couvercle de la batterie sur l'onduleur.
14. Débarrassez-vous de la batterie usagée dans un centre de recyclage approprié ou renvoyez-la au fournisseur dans l'emballage de la nouvelle batterie.
15. L'onduleur est maintenant prêt à fonctionner de façon normale.

REMARQUE: il faut effectuer un test de batterie en cas d'alarme Batterie faible/défectueuse après le remplacement de la batterie, afin de supprimer l'alarme. Un test de batterie peut être effectué à l'aide du logiciel ou en débranchant le cordon d'alimentation de la prise murale pendant 10 secondes, puis en le rebranchant.

Chapter 8: Specifications

SYSTEM SPECIFICATIONS			
Model Number	EN450G	EN600GU	EN750G
Topology	Standby, Simulated Sine Wave		
Maximum Power Capacity	450VA 250W	600VA 330W	750VA 450W
INPUT			
Number of Phase	Single (1Ø 2W +G)		
Nominal Voltage	120VAC		
Acceptable Input voltage	0 - 150VAC		
Voltage Range	95 - 140VAC		
Frequency Limits	60 Hz, ±6Hz		
Low Voltage Transfer Point	95V resets to Utility Power at 99V or higher		
High Voltage Transfer Point	140V resets to Utility Power at 136V or lower		
Input Protection	Resettable Circuit Breaker		
OUTPUT NON-BATTERY OPERATION			
Voltage Range	95 - 140VAC		
Voltage Regulation	120VAC: -20.8% - +16.7%		
Frequency Range	60Hz: 54 - 66Hz		
Efficiency (Line Mode)	>98% (Full Load)		
OUTPUT BATTERY OPERATION			
Waveform Type	Simulated Sine Wave		
Nominal Voltage	120VAC		
Voltage Regulation	Nominal ±5% (until Low Battery Warning)		
Frequency	60Hz, ±0.5Hz (unless synchronized to utility)		
Transfer Time	6 ms Typical		
Overload Capacity	AC Mode: 105% for 1-minute then shutdown, 115% Shutdown Immediately DC Mode: 105% for 20-seconds then shutdown, 115% Shutdown Immediately		
Protection	Over-Current, Short-Circuit Protected, Latching Shutdown		
REGULATORY COMPLIANCE			
Safety and Approvals	cTUVus (Conforms to UL1778 5th Edition & CSA 22.2 no. 107.3:2014/R:2017-10), FCC Class B, CE certified, RoHS2 (EU Directive 2011/65/EU & 2015/863/EU)		

BATTERY SYSTEM		
Battery Type	Sealed, Non-Spillable, Maintenance Free, Value Regulated, Lead Acid	
Typical Recharge Time	8-hours to 90% capacity from a full load discharge	
Typical Battery Life	3 to 5 years. Environmental factors do affect battery life. High temperatures, poor utility power, and frequent, short duration discharges have a negative impact on battery life.	
Battery Module Part #	BM0094	BM0095
Runtime: Full Load (minutes)	2	3
Runtime: Half Load (minutes)	10	11
SURGE PROTECTION AND FILTERING		
Surge Energy Rating	1000 J	
Surge Current Capability	6,500 Amps total (one time 8 to 20us waveform)	
Surge Response Time	0 ns (instantaneous) normal mode; <5 ns common mode	
Surge voltage let-through (as a percentage of an applied ANSI C62.41 Cat. A ±2 kV)	<5%	
Noise Filter	>45db normal and common mode EMI/RFI suppression	
Audible Noise at 1 m (3 ft.)	<45 dBA	
ENVIRONMENTAL		
Operating Temperature	0 to 40°C (+32 to +104°F)	
Operating Elevation	0 to 3000m (0 to +10,000 ft)	
Operating/Storage Humidity	0 to 95% non-condensing	
Storage Temperature	-15 to +45°C (+5 to +113°F)	
Storage Elevation	0 to 15,000m (0 to +50,000 ft)	
PHYSICAL		
Size - Net L X W X H	12.8 x 5.7 x 4.1” 324 x 145 x 103 mm	12.8 x 7.8 x 4.1” 324 x 198 x 103 mm
Weight - Net	7.3 lbs 3.3 Kgs	9.9 lbs 4.5 Kgs
Size - Shipping L X W X H	14.9 x 5.8 x 9.0” 378 x 147 x 227 mm	15.2 x 5.8 x 10.9” 386 x 147 x 276 mm
Weight - Shipping	8.4 lbs 3.8 Kgs	10.8 lbs 4.9 Kgs
Power Cord	5 ft. w/5-15P	
Output Receptacles	4 - Battery Backup & Surge 4 – Surge Only	5 - Battery Backup & Surge 5 – Surge Only
USB CHARGING PORTS EN600GU ONLY		
Qty / Type / Voltage / Current	Two (2) / Type ‘A’ / 5Volts / 3Amps max total	

Specifications are subject to change without prior notice.

Chapter 9: Limited Product Warranty

Para Systems, Inc. (Para Systems) warrants this equipment, when properly applied and operated within specified conditions, against faulty materials (excluding the batteries) or workmanship for a period of three years from the date of purchase. Para Systems Inc. (Para Systems) warrants the batteries for a period of two years from the date of purchase. For equipment sites within the United States and Canada, this warranty covers depot repair or replacement of defective equipment at the discretion of Para Systems. Depot repair will be from the nearest authorized service center. The customer pays for shipping the product to Para Systems. Para Systems pays ground freight to ship the product back to the customer. Replacement parts and warranty labor will be borne by Para Systems. For equipment located outside of the United States and Canada, Para Systems only covers faulty parts. Para Systems products that are depot repaired or replaced pursuant to this warranty shall only be warranted for the unexpired portion of the warranty applying to the original product. This warranty applies only to the original purchaser who must have properly registered the product within 10 days of purchase.

The warranty shall be void if (a) the equipment is damaged by the customer, is improperly used, is subjected to an adverse operating environment, or is operated outside the limits of its electrical specifications; (b) the equipment is repaired or modified by anyone other than Para Systems or Para Systems approved personnel; or (c) has been used in a manner contrary to the product's User's Manual or other written instructions.

Any technical advice furnished before or after delivery regarding use or application of Para Systems' equipment is furnished without charge and on the basis that it represents Para Systems' best judgment under the circumstances, but it is used at the recipient's sole risk.

EXCEPT AS PROVIDED HEREIN, PARA SYSTEMS MAKES NO WARRANTIES, EXPRESSED OR IMPLIED, INCLUDING WARRANTIES OF MERCHANTABILITY AND FITNESS FOR A PARTICULAR PURPOSE. Some states do not permit limitation of implied warranties; therefore, the aforesaid limitation(s) may not apply to the purchaser.

EXCEPT AS PROVIDED ABOVE, IN NO EVENT WILL PARA SYSTEMS BE LIABLE FOR DIRECT, INDIRECT, SPECIAL, INCIDENTAL, OR CONSEQUENTIAL DAMAGES ARISING OUT OF THE USE OF THIS PRODUCT, EVEN IF ADVISED OF THE POSSIBILITY OF SUCH DAMAGE. Specifically, Para Systems is not liable for any costs, such as; labor for on-site installation, on-site maintenance or on-site service, lost profits or revenue, loss of equipment, loss of use of equipment, loss of software, loss of data, cost of substitutes, claims by third parties, or otherwise. The sole and exclusive remedy for breach of any warranty, expressed or implied, concerning Para Systems' products and the only obligation of Para Systems hereunder, shall be depot repair or replacement of defective equipment, components, or parts; or, at Para Systems' option, refund of the purchase price or substitution with an equivalent replacement product. This warranty gives you specific legal rights and you may also have other rights which vary from state to state.

No employee, salesman, or agent of Para Systems is authorized to add to or vary the terms of this warranty.

Please go to our web site at minutemanups.com/warranty/# to fill out the Warranty Registration.

A1. Declaration of Conformity

Application of Council Directive(s): 2014/30/EU, 2014/35/EU, cTUVus (for UL1778)

Standard(s) to which Conformity is declared: EN61000-3-2, EN61000-3-3, EN62040-2, IEC61000-2-2 IEC61000-4-2, IEC61000-4-3, IEC61000-4-4, IEC61000-4-5, IEC61000-4-6, IEC61000-4-8, IEEE C62.41 Category A, UL1778, CSA 22.2 no. 107.3:2014/R:2017-10, FCC Class B

Manufacturer's Name: Para Systems, Inc. (MINUTEMAN UPS)

Manufacturer's Address: 1455 LeMay Drive, Carrollton, Texas 75007 (USA)

Type of Equipment: Uninterruptible Power Supplies (UPS)

Model No: EN450G, EN600GU, EN750G

Year of Manufacture: Beginning November 2021

I hereby declare that the equipment specified above conforms to the above Directive(s).

Robert Calhoun (Name)	Manager Engineering (Position)
Place: Carrollton, Texas, USA	Date: November 1, 2021

Notes:

Notes: